Piloted counterbore

Individually designed countersinks for optimal „hole-chamfer-alignment“

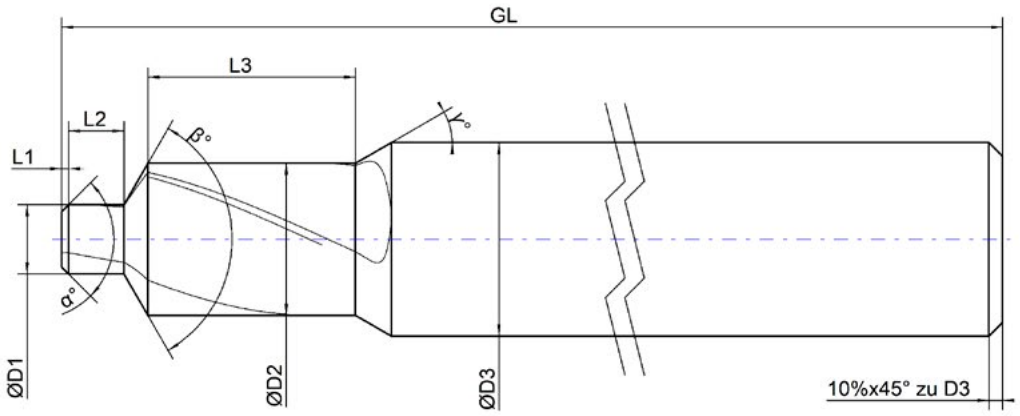

☐ **Order** **Order number:** _____ ☐ **Inquiry**

Dimensions: D_1: _____ GL: _____ α: _____ D_2: _____ L_1: _____ β: _____ D_3: _____ L_2: _____ γ: _____ L_3: _____ z: _____	**Coating:** ☐ Coated*: _____ ☐ Uncoated	**Cooling channels:** ☐ Yes ☐ No **Cutting direction:** ☐ Left ☐ Right
Material to be machined: _____	**Shank shape:** _____ **Material:** ☐ HM ☐ HSS	**Quantity:** _____
Date, signature & company stamp: _____		**Contact person:** _____

* Without further information, the most suitable coating will be used.