ACTIONDRILL® by HB microtec Special-Tool

HB microtec® ACTIONTOOLS & ENGINEERING

Forward and reverse radius mill

Customized special mill suitable for your application

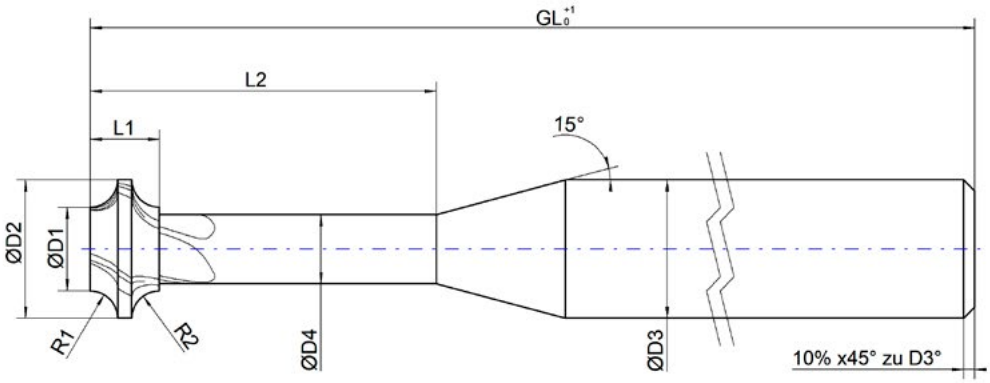

☐ **Inquiry**

☐ **Order** **Order number:** _____ **Other:** _____

Dimensions: D_1: _____ GL: _____ R_1: _____ D_2: _____ L_1: _____ R_2: _____ D_3: _____ L_2: _____ Z: _____ D_4: _____	**Coating:** ☐ Coated*: _____ ☐ Uncoated	**Cooling channels:** ☐ Yes ☐ No **Cutting direction:** ☐ Left ☐ Right
Material to be machined:	**Shank shape:**	**Quantity:**
Date, signature & company stamp:		**Contact person:**

* Without further information, the most suitable coating will be used.