ACTIONDRILL® by HB microtec Special-Tool

HB Microtec® ACTIONTOOLS & ENGINEERING

Conical

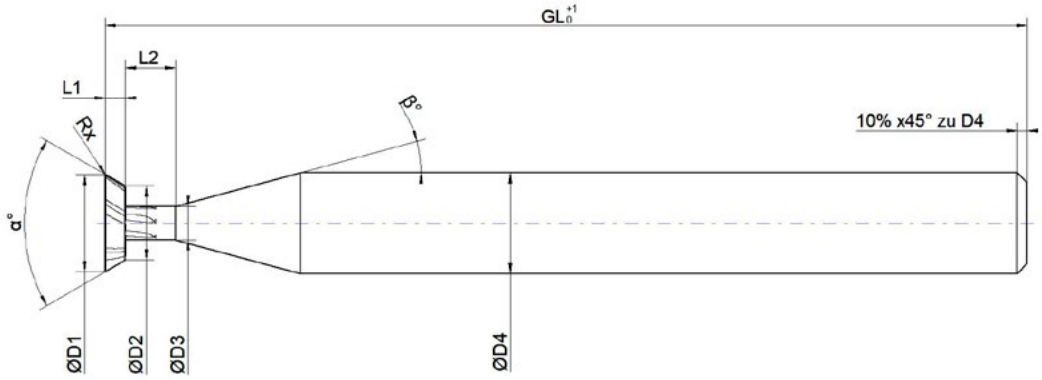

Form A Form B

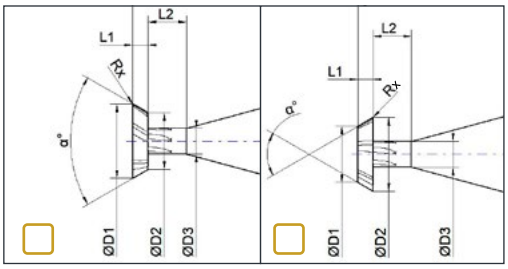

Corner alignment "sharp" = 0.004 mm - 0.01 mm rounded

(cutting edge protection)

☐ **Inquiry**

☐ **Order** **Order number:** _____ **Other:** _____

Dimensions:	**Coating:**	**Cooling channels:**
D_1: _____ GL: _____ α: _____	☐ Coated*: _____	☐ Yes ☐ No
D_2: _____ L_1: _____ β: _____	☐ Uncoated	**Cutting direction:**
D_3: _____ L_2: _____ R_x: _____		☐ Left ☐ Right
D_4: _____ Z: _____		
Material to be machined:	**Shank shape:**	**Quantity:**
Date, signature & company stamp:		**Contact person:**

* Without further information, the most suitable coating will be used.