Special deburring drill

Centering + Drilling + Chamfering + Back chamfering



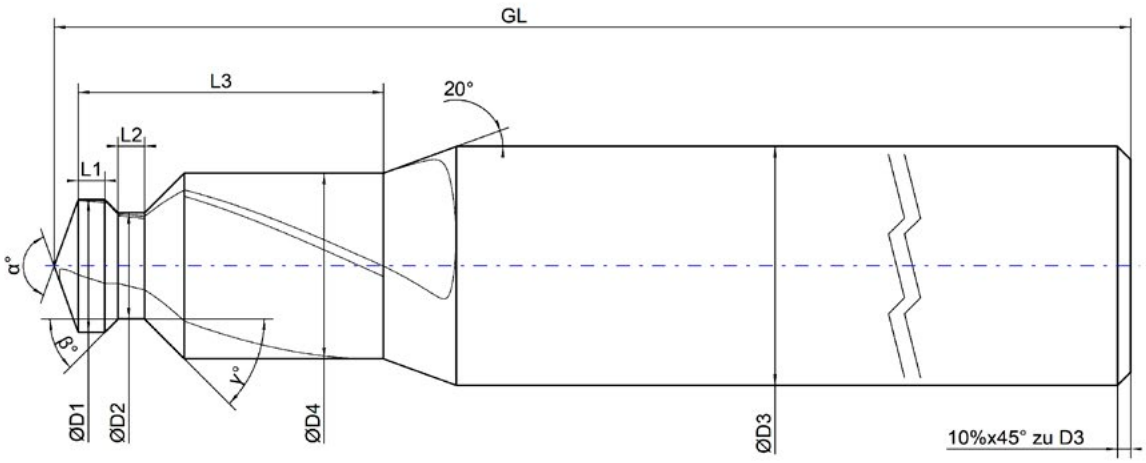

☐ **Order** **Order number:** _____ ☐ **Inquiry**

Dimensions: D_1: _____ GL: _____ α: _____ D_2: _____ L_1: _____ β: _____ D_3: _____ L_2: _____ γ: _____ D_4: _____ L_3: _____ Z: _____	**Coating:** ☐ Coated*: _____ ☐ Uncoated	**Cooling channels:** ☐ Yes ☐ No **Cutting direction:** ☐ Left ☐ Right
Material to be machined:	**Shank shape:**	**Quantity:**
Date, signature & company stamp:		**Contact person:**

* Without further information, the most suitable coating will be used.